MANCHESTER 1824

The University of Manchester

# Wireless Sensor Networks in Harsh Electrical Environments

## Project Overview

**Background**: During their development phase, gas turbine engines may be instrumented with up to 3000 sensors hardwired to a central data acquisition unit by over 12km of cabling. The aim of this project is to develop a Wireless Sensor Network (WSN) technology capable of replacing some of these hardwired sensors.

**Motivations**: The use of WSN technologies should lead to: reductions in cabling costs and installation time, greater flexibility in sensor deployment, and new methods for on-engine sensing.

**Deliverables:** The project will use Software Defined Radio (SDR) techniques to develop and evaluate a prototype WSN capable of operating in the harsh electrical environment between the engine casing and nacelle of a gas turbine engine. The project will consider the application of this technology to other electrically harsh environments.

## Wireless Sensor Networks

In the context of this project, a Wireless Sensor Network (WSN) comprises a distributed set of autonomous sensor nodes which use wireless communication principles and data networking protocols to relay measurements to a base-station for subsequent storage and analysis. The performance of the WSN is characterised by: measurement sampling frequency, data rate, latency, and error rate (Quality of Service).

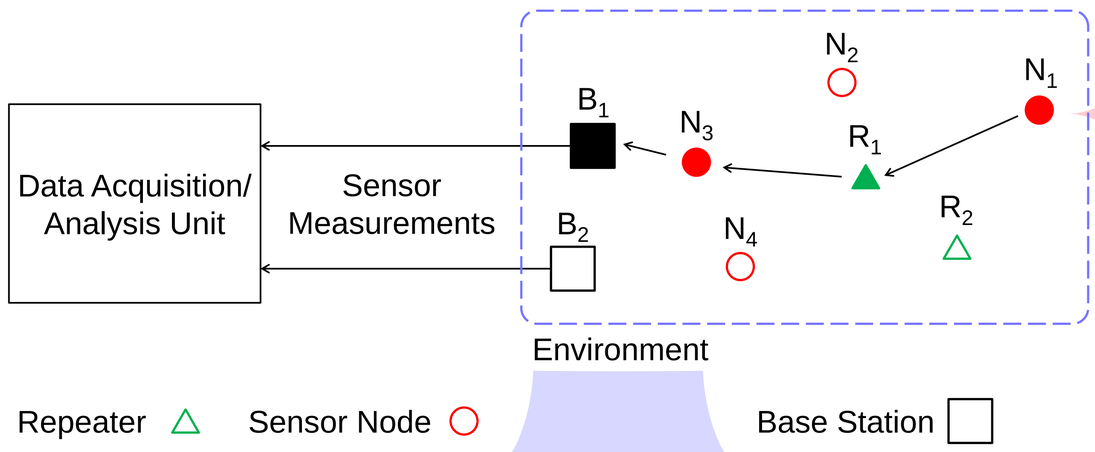


## Operating Environment

The WSN is to be deployed between the engine casing and the nacelle of a Trent 900 engine as shown in the figure to the right. Transmitted signals reflect off the many metallic surfaces and the lightning protection mesh in the nacelle.

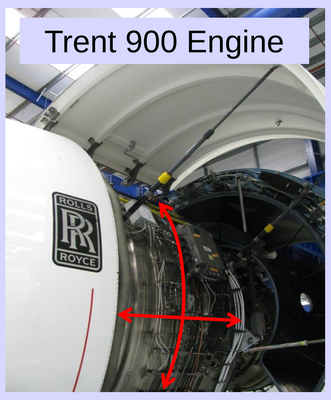


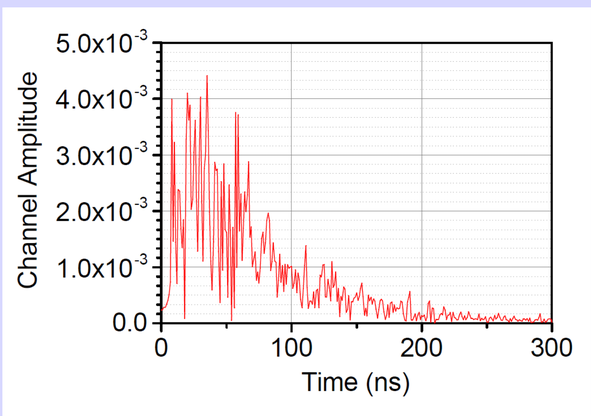


Multiple copies of the transmitted signal simultaneously reach the receiving antenna. This is referred to as multipath propagation. This can be observed in the channel impulse response measurement presented in the graph to the left.

## Software Defined Radio

In a Software Defined Radio (SDR), the components of the communication system that are typically implemented in hardware, are instead implemented in software. The advantages of using SDR over commercial wireless nodes include:

- Ability to implement a wide variety of modulation schemes and network protocols using a common hardware platform,
- Ability to analyse the internal signals of the physical layer of the communication system to better understand system performance,
- Ability to implement variations of modulation schemes utilised in current wireless standards.

In this project, National Instruments (NI) Universal Software Radio Peripherals (USRP 2921) and NI LabVIEW have been used to implement a SDR wireless test-bed.

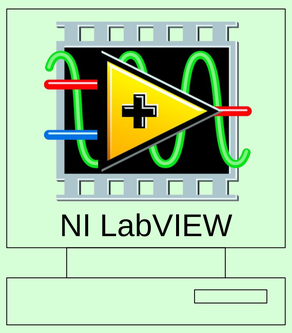


NI USRP 2921

## Embedded Wireless Sensor Node

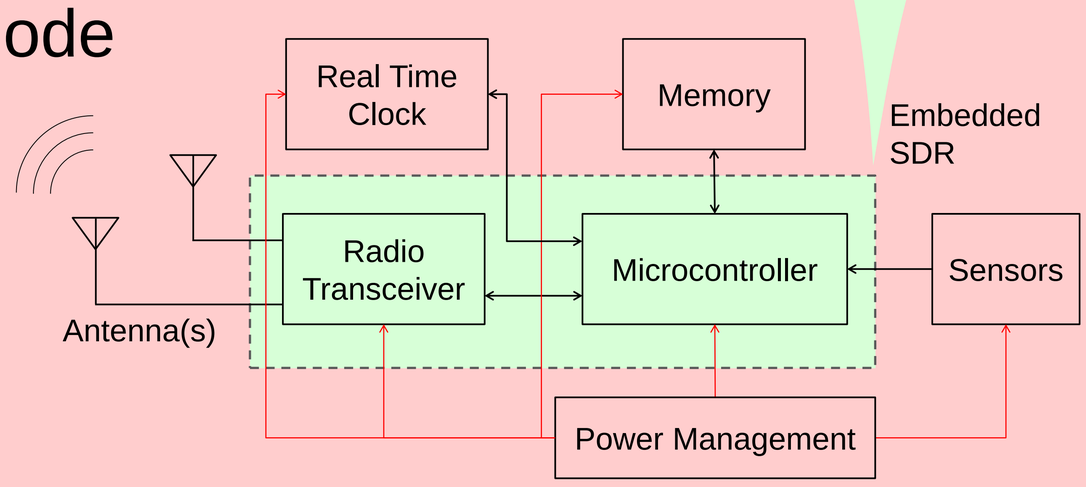


An envisaged implementation of a WSN node, utilising embedded SDR, is shown in the figure above. Although the focus of the project is on the reliable delivery of data between nodes, synchronising sensor measurements, and minimising power consumption will be considered during the prototype design.

## Project Status

A SDR test-bed has been developed for evaluating the performance of a range of candidate modulation schemes. Phase Shift Keying (PSK) and Frequency Shift Keying (FSK), two widely used modulation schemes in wireless communication standards, have been implemented in LabVIEW. An extensive set of radio channel characterisation measurements were carried out on a Trent 900 engine at Rolls-Royce, Derby in June 2014. Analysis of these measurements is informing the design of the physical layer modulation schemes being implemented on a prototype embedded SDR sensor node which will be trialled on a Trent 900 engine in June 2015.

Future research will include investigating suitable wireless network topologies, time synchronisation of measurements, and the use of adaptive modulation schemes. The project will deliver a 10 node technology demonstrator.


**Microwave and Communication Systems Group**
**School of Electrical and Electronic Engineering**
**The University of Manchester**

For details contact: **Hassan Hakim Khalili**
E-mail: **hassan.hakimkhalili@manchester.ac.uk**
Supervisors: **Peter R. Green and Danielle George**
Email: **p.r.green@manchester.ac.uk**